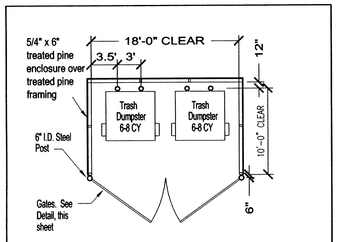

NOTE: Bollards behind the dumpsters shall be 6'-0" tall above the pavement surface and extend 3'-0" into the ground.

NO SCALE SEC-C17W

10 DUMPSTER LAYOUT

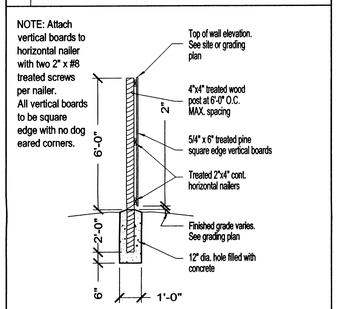

NO SCALE SEC-C12

16 PRIVACY FENCE DETAIL

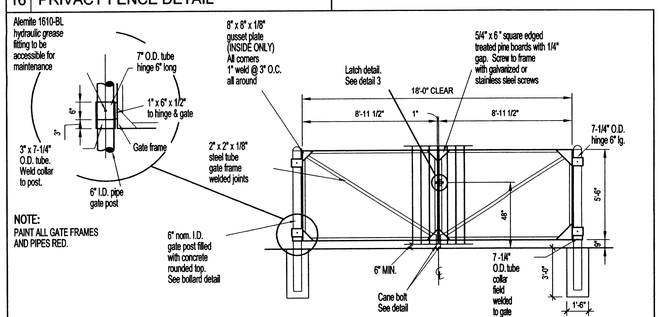

NOTE:
PAINT ALL GATE FRAMES AND PIPES RED.

6" nom. I.D. gate post filled with concrete rounded top. See bollard detail

NO SCALE SEC-C18

11 GATE DETAIL FOR DUMPSTER ENCLOSURE

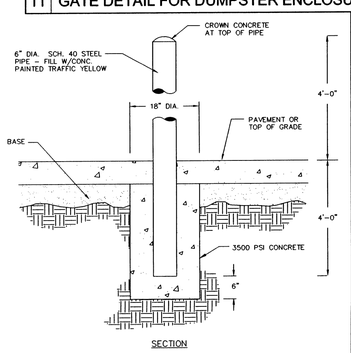

BOLLARD POST DETAIL

N.T.S. CMLDS STD. DTL.

NOTE:
MOUNT CANE BOLT AND GATE LATCH ASSEMBLIES THROUGH FACE BOARDS INTO STEEL FRAME

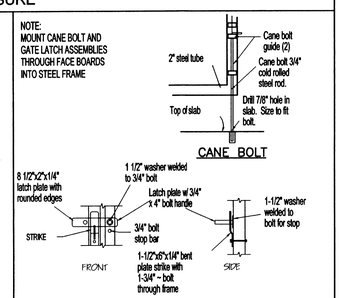

NO SCALE SEC-C19

12 GATE LATCH / BOLT DETAILS

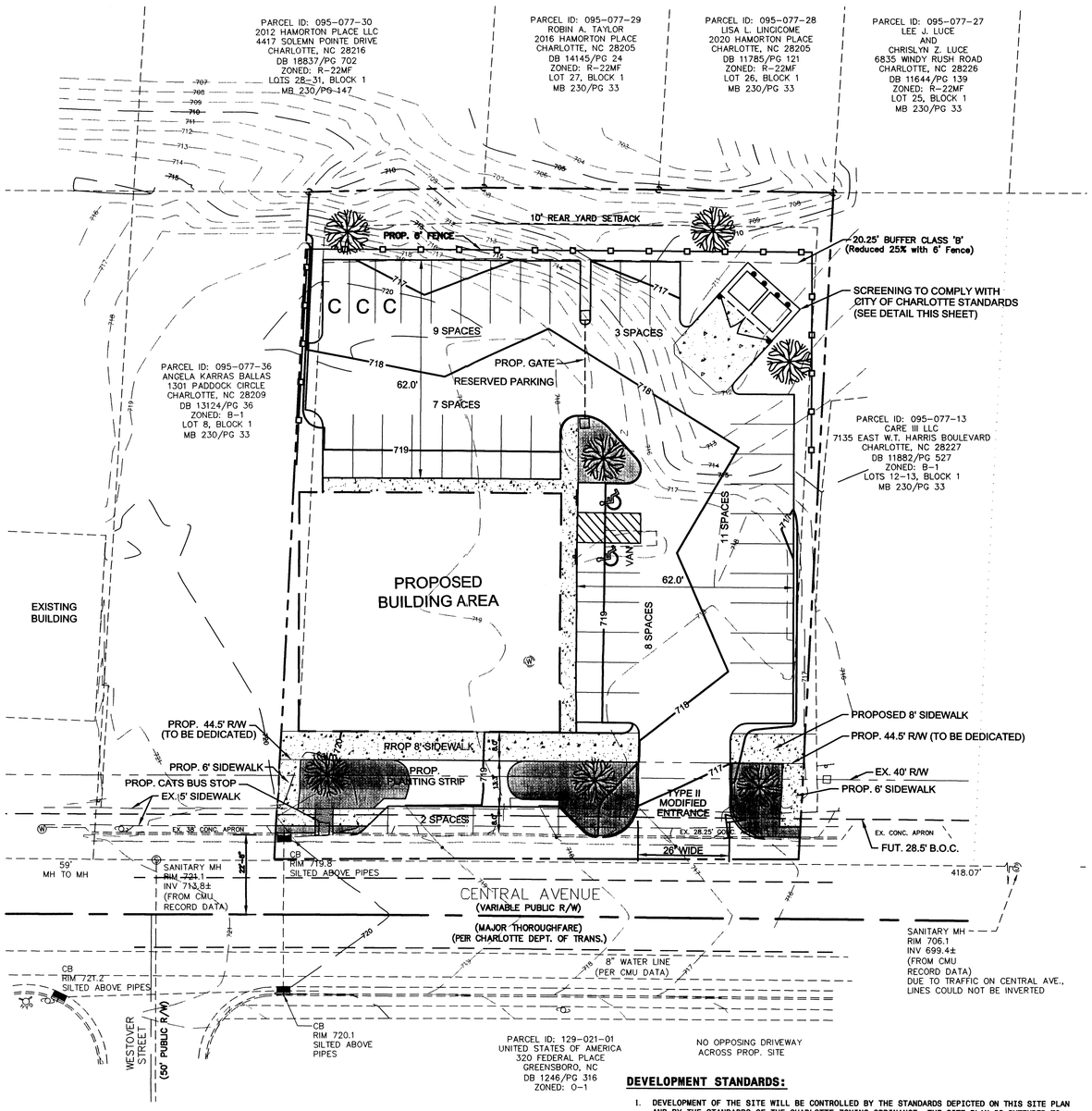

ZONING NOTES:

1. EXISTING ZONING: B-1
2. PROPOSED ZONING: MUDD-CD
3. MINIMUM STREET SETBACK: 29'-3" (FROM BACK OF CURB)
4. MINIMUM SIDE YARDS: NONE, BUT 10' BUILDING SEPARATION REQUIRED ADJACENT TO A RESIDENTIAL USE.
5. MINIMUM REAR YARD: NONE, BUT 10' BUILDING SEPARATION REQUIRED ADJACENT TO A RESIDENTIAL USE.
6. SHORT TERM BIKE RACK - 2 MIN. (5% OF 41 SPACES = 2)
7. LONG TERM BIKE STORAGE - 2 MIN.

SITE DATA

TOTAL SITE SURVEYED: 0.656 AC

TOTAL IMPREVIOUS AREA: 19,627 S.F.

TOTAL IMPERVIOUS AREA IS BELOW THE 20,000 S.F. THRESHOLD. THEREFORE, NO DETENTION IS REQUIRED.

DEVELOPMENT STANDARDS:

1. DEVELOPMENT OF THE SITE WILL BE CONTROLLED BY THE STANDARDS DEPICTED ON THIS SITE PLAN AND BY THE STANDARDS OF THE CHARLOTTE ZONING ORDINANCE. THE SITE PLAN IS INTENDED TO REFLECT THE ARRANGEMENT OF PROPOSED BUILDINGS AND USES ON THE SITE, BUT THE EXACT CONFIGURATION AND PLACEMENT MAY BE MODIFIED.
2. THE PROPOSED USE OF THE PROPERTY WILL BE FOR MIXED USE OFFICE, RETAIL, RESTAURANT, PERSONAL SERVICES AND MEDICAL OFFICE USES ALONG WITH ASSOCIATED PARKING, ACCESSORY USES, AND SERVICE AREAS.
3. ALL DUMPSTERS WILL BE SCREENED WITH SOLID ENCLOSURES AND GATES. PETITIONER AGREES TO MEET ALL REQUIREMENTS AS STATED IN CHAPTERS 9 & 12 OF THE CHARLOTTE CITY CODE REGARDING SOLID WASTE, COMPACTOR AND RECYCLING AREAS.
4. PARKING WILL BE PROVIDED WHICH MEETS OR EXCEEDS THE REQUIREMENTS OF THE ORDINANCE. PARKING WILL BE PROVIDED BEHIND FRONT SETBACK LINE.
5. ANY DETACHED LIGHTING ON THE SITE WILL NOT EXCEED 20 FEET IN HEIGHT AND WILL BE AIMED INTO THE SITE AWAY FROM ADJOINING PROPERTIES AND PUBLIC STREETS TO PREVENT GLARE. LIGHTING SHALL BE FULLY SHIELDED. NO WALL PACK LIGHTING WILL BE USED.
6. THE PROJECT WILL COMPLY WITH ALL MUDD STANDARDS AND REVIEW PROCESSES.
7. STREET WALLS THE FIRST FLOORS OF ALL BUILDINGS, INCLUDING STRUCTURED PARKING, MUST BE DESIGNED TO ENCOURAGE AND COMPLIMENT PEDESTRIAN-SCALE ACTIVITY. IT IS INTENDED THAT THIS BE ACCOMPLISHED PRINCIPALLY BY THE USE OF WINDOWS AND DOORS ARRANGED SO THAT THE USES ARE VISIBLE FROM AND/OR ACCESSIBLE TO THE STREET ON AT LEAST 50% OF THE LENGTH OF THE FIRST FLOOR STREET FRONTAGE. WORKS OF ART, FOUNTAINS AND POOLS, STREET FURNITURE, LANDSCAPING AND GARDEN AREAS, ARCHITECTURALLY ARTICULATED FACADES, AND DISPLAY AREAS MAY BE CONSIDERED IN MEETING THIS REQUIREMENTS.

   EACH TENANT OCCUPYING SPACE ON THE GROUND FLOOR WILL HAVE AN OPERABLE DOOR FROM THE PUBLIC SIDEWALK OR OPEN SPACE AND THE DOORS WILL NOT SWING ACROSS THE SETBACK LINE.
8. MINIMUM BUILDING HEIGHT: 2 STORIES
9. MAXIMUM BUILDING HEIGHT: 60'-0"
10. MAXIMUM BUILDING SIZE: 13,500 S.F.
11. MINIMUM PARKING: 23
12. PARKING SPACES PROVIDED: 40
13. "NO TREES 8" DIAMETER OR LARGER ARE PRESENT IN THE SETBACK OR RIGHT-OF-WAY"
14. PROPOSED RIGHT-OF-WAY TO BE DEDICATED TO THE CITY OF CHARLOTTE PRIOR TO START OF CONSTRUCTION. EXISTING GREEN SPACE MAY BE MAY BE USED TO MEET MINIMUM REQUIREMENTS FOR ZONING, PRIOR TO R/W DEDICATION.
15. BILLBOARD WILL BE REMOVED PRIOR TO THE START OF CONSTRUCTION.

VICINITY MAP

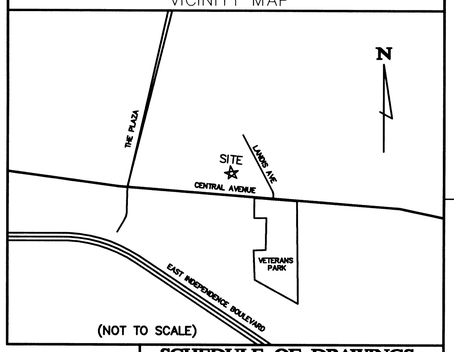

SCHEDULE OF DRAWINGS

1 - REZONING PLAN

06133

GENERAL NOTES

BOUNDARY & PLANIMETRIC SURVEY
DATA PROVIDED BY:
SITE TOPOGRAPHIC PROVIDED BY:
FORESITE SURVEY, INC.
5950 FAIRVIEW ROAD, SUITE 100
CHARLOTTE, NORTH CAROLINA 28210
(704) 553-6167 * FAX (704) 553-8860

OTHER TOPO FROM MECKLENBERG COUNTY GIS

ENGINEER:
BURTON ENGINEERING ASSOCIATES
5950 FAIRVIEW ROAD, SUITE 100
CHARLOTTE, NORTH CAROLINA 28210
(704) 553-8881 * FAX (704) 553-8860

ARCHITECT:
PUGH & SCARPA
406 LOUISE AVENUE
CHARLOTTE, NORTH CAROLINA 28204
(704) 347-3464

OWNER:
FOOTHILLS CAPITAL, LLC
2910 SELWYN AVENUE, SUITE 322
CHARLOTTE, NORTH CAROLINA 28209
(704) 527-8600 PHONE
(704) 527-1155 FAX

DRAWING INFORMATION

BEFORE YOU DIG CALL TOLL FREE 1-800-632-4949 ULOCO

TRUE NORTH

GRAPHIC SCALE

20 0 10 20 40 80

(IN FEET)
1" = 20

THIS DRAWING IS THE PROPERTY OF BURTON ENGINEERING ASSOCIATES AND IS NOT TO BE REPRODUCED OR COPIED IN WHOLE OR IN PART. IT IS NOT TO BE USED ON ANY OTHER PROJECT AND IS TO BE RETURNED UPON REQUEST.

RECEIVED
NOV 10 2006
BY:

PRELIMINARY
NOT FOR CONSTRUCTION

BURTON ENGINEERING ASSOCIATES
CIVIL ENGINEERS
LAND PLANNERS
5950 Fairview Rd. * Suite 100 * Charlotte, NC 28210
(704) 553-8881 * Fax (704) 553-8860

Project
2013 CENTRAL AVENUE
PROPOSED RETAIL AND OFFICE BUILDING

Sheet Title
REZONING PLAN

CTB
Engineer
LB
Drawn By
08/20/06
Date

Revisions
REV. 9-20-2006
REV. 10-23-2006

Project Number
478-001

Sheet 1 of 1