CHARLOTTE

CHARLOTTE HISTORIC DISTRICT COMMISSION
CERTIFICATE OF APPROPRIATENESS - AMENDED

CERTIFICATE NUMBER: 2015-282

DATE: January 25, 2016
March 31, 2016 - Amended

ADDRESS OF PROPERTY: 1556 Merriman Avenue

TAX PARCEL NUMBER: 11910308

HISTORIC DISTRICT: Wilmore

OWNER(S): Jason Murphy

DETAILS OF APPROVED PROJECT: The project is the construction of a new single family house. The proposed front setback is approximately 26 feet from the right of way. Building height from finished floor to ridge is +/- 20'-6". Siding materials are brick and wood. Windows are wood Simulated True Divided Light (STDL). Other features include eave brackets, wood trim and a rear dormer. Changes to previously approved plans include expanding rear deck to the left rear corner of the house, relocating the HVAC units behind the left rear offset and installing a new wood fence. The fence pickets will be adequately spaced and framed off at the top and bottom as illustrated in the attached exhibit. The fence will not exceed six feet in height as measured from grade and all framing members will face inward to the property being enclosed. The finished fence will be painted or stained.

The project was approved by the HDC January 13, 2016.

- This Certificate of Appropriateness (COA) indicates that this project proposal has been determined to comply with the standards and policies of the Charlotte Historic District Commission.
- Display the blue COA placard in a visible location along with any required permits.
- No other approvals are to be inferred.
- No demolition other than that specifically indicated on any attached plans is authorized under this approval.
- All work must be completed in accordance with all other applicable state and local codes.
- Any changes from or additions or deletions to the plans referenced herein will void this Certificate, and a new application must be filed with the Historic District Commission.

This Certificate is valid for a period of six months from the date of issuance. Failure to obtain a building permit in that time will be considered as a failure to comply with the Certificate and the Certificate will become invalid. If a building permit is not required, then the approved work must be completed within six months of the date of issuance of this Certificate. The Certificate can be renewed within twelve months of its issuance by Historic District Commission staff by written request and submission of a valid reason for failure to comply within the six-month deadline.

Tom Egan
Chairman

Kristina A. Harpst
Staff

CHARLOTTE-MECKLENBURG PLANNING DEPARTMENT
www.charlotteplanning.org
600 East Fourth Street
Charlotte, NC 28202-2853
PH: (704)-336-2205
FAX: (704)-336-5123

DRAWING INDEX:

1 - SITE PLAN
2 - FOUNDATION PLAN
3 - FIRST FLOOR PLAN
4 - SECOND FLOOR PLAN
5 - FRONT AND LEFT ELEVATIONS
6 - REAR AND RIGHT ELEVATIONS
7 - DETAILS

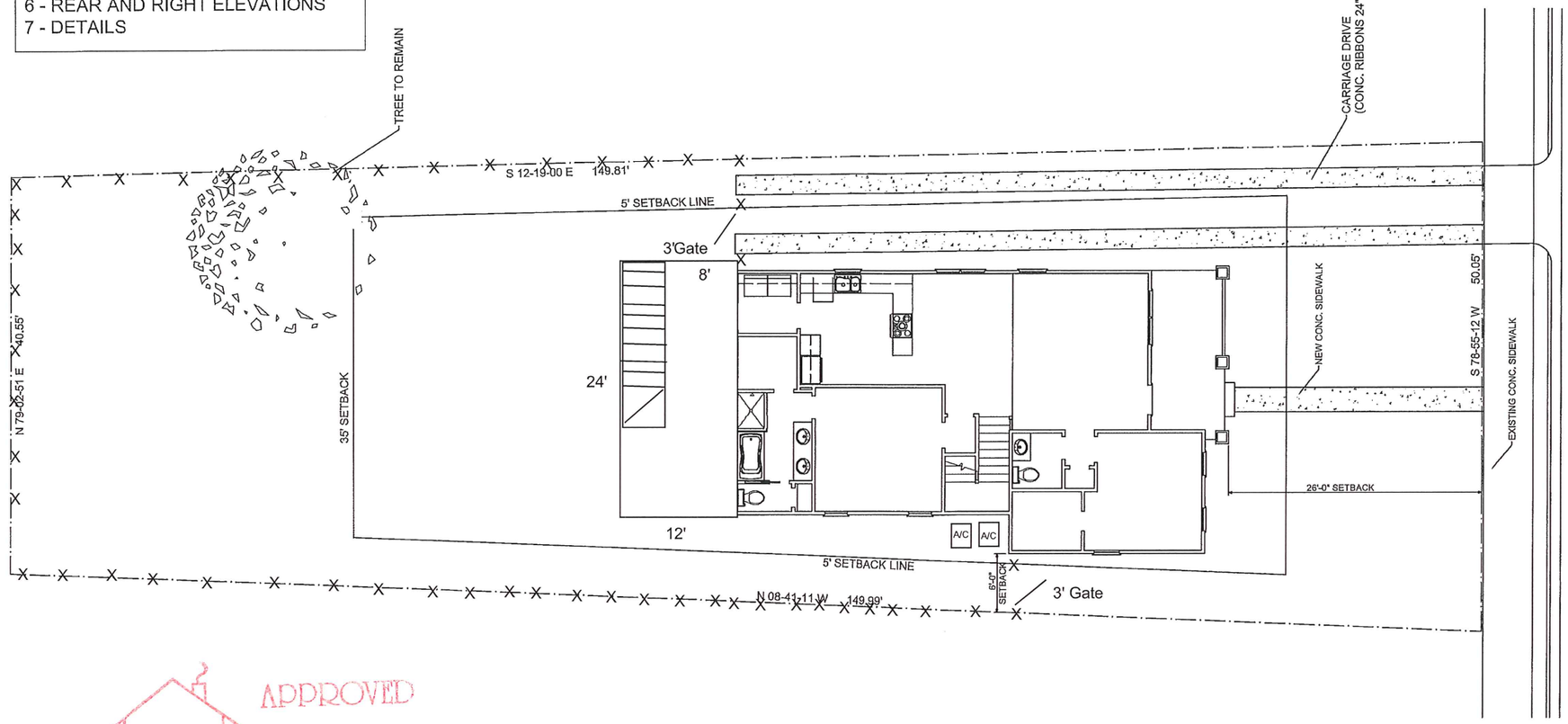

APPROVED
Charlotte Historic District Commission
Certificate of Appropriateness
2015-282

AREAS:	HEATED	UN-HEATED*
FIRST FLOOR	1190 SQ. FT.	288 SQ. FT.
SECOND FLOOR	604 SQ. FT.	-
TOTALS	**1794 SQ. FT.**	**288 SQ. FT.**
* = PORCHES AND DECK		

Daedalus Properties
Charlotte, NC
704-890-3907 Office
704-377-8412 fax

SITE PLAN

New Home at:
1556 Merriman Av.
Charlotte, NC

DATE: 12-28-15

DRAWN BY: BILL ELMORE

SHEET 1 OF 7

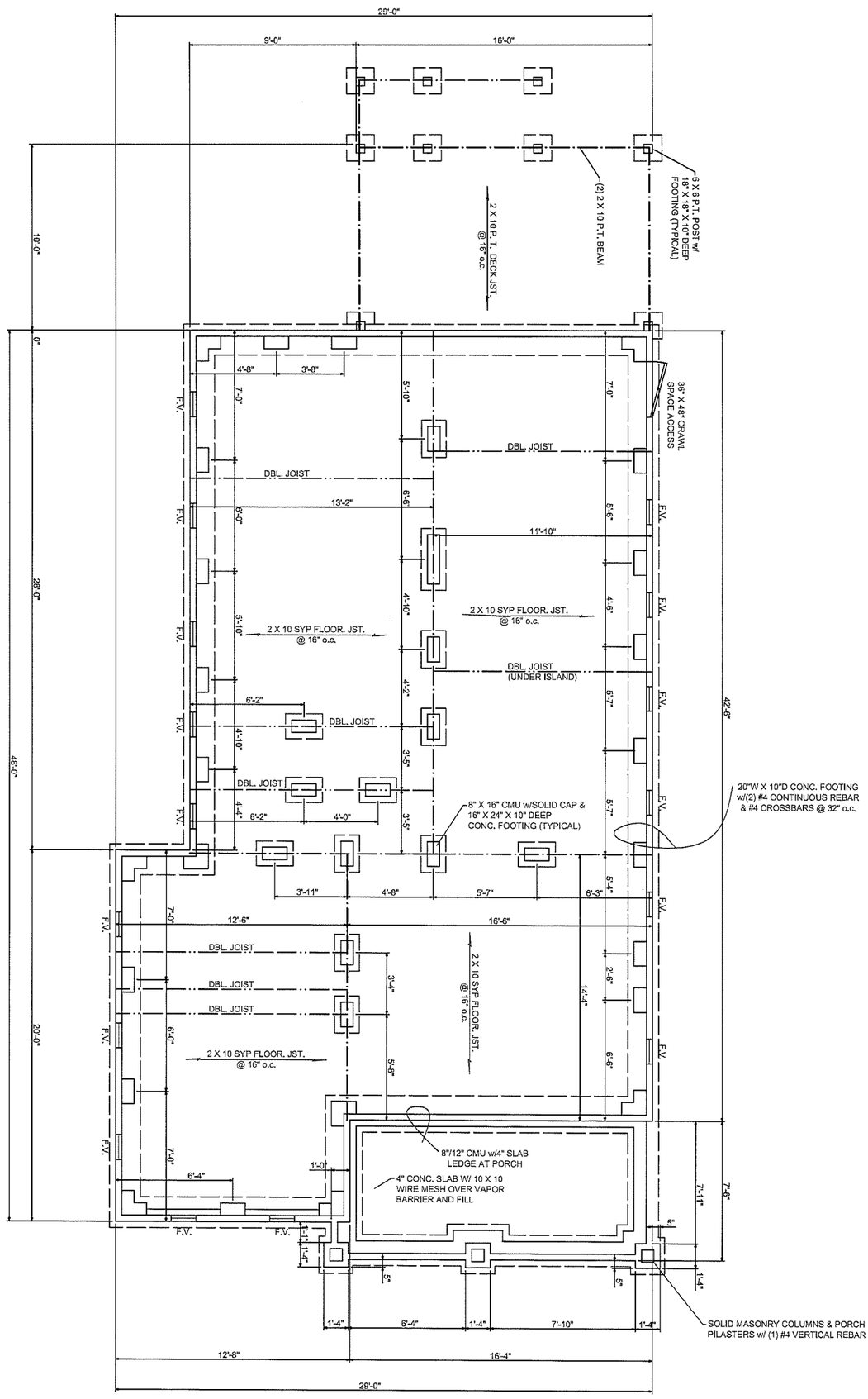

NOTES:
* CRAWL SPACE SOIL TO BE TREATED FOR TERMITE PROTECTION
* 6 MIL POLY VAPOR BARRIER, 100% COVERAGE

FOUNDATION PLAN 1/4" = 1'-0"

NOTE: SEE SHEET S1 FOR STRUCTURAL DETAILS

CRAWL SPACE VENTILATION (PER 2012 NCRBC SECTION R408)
AREA = 1281sf VENTILATION REQUIRED: 1281/150 = 8.5sf
8.5sf = 1230si
8 X 16 INCH FOUNDATION VENTS = 128si => NET FREE AREA = 96si
FOUNDATION VENTS (PER 2012 NCRBC SECTION R408.1.2)
1230si / 96si = 13 VENTS REQUIRED

SHEET 2 OF 7	DRAWN BY: BILL ELMORE	DATE: 12-28-15	New Home at; 1556 Merriman Av. Charlotte, NC	FOUNDATION PLAN

Daedalus Properties
Charlotte, NC
704-890-3907 Office 704-377-8412 fax

APPROVED
Charlotte
Historic District
Commission
Certificate of Appropriateness #
2015-282

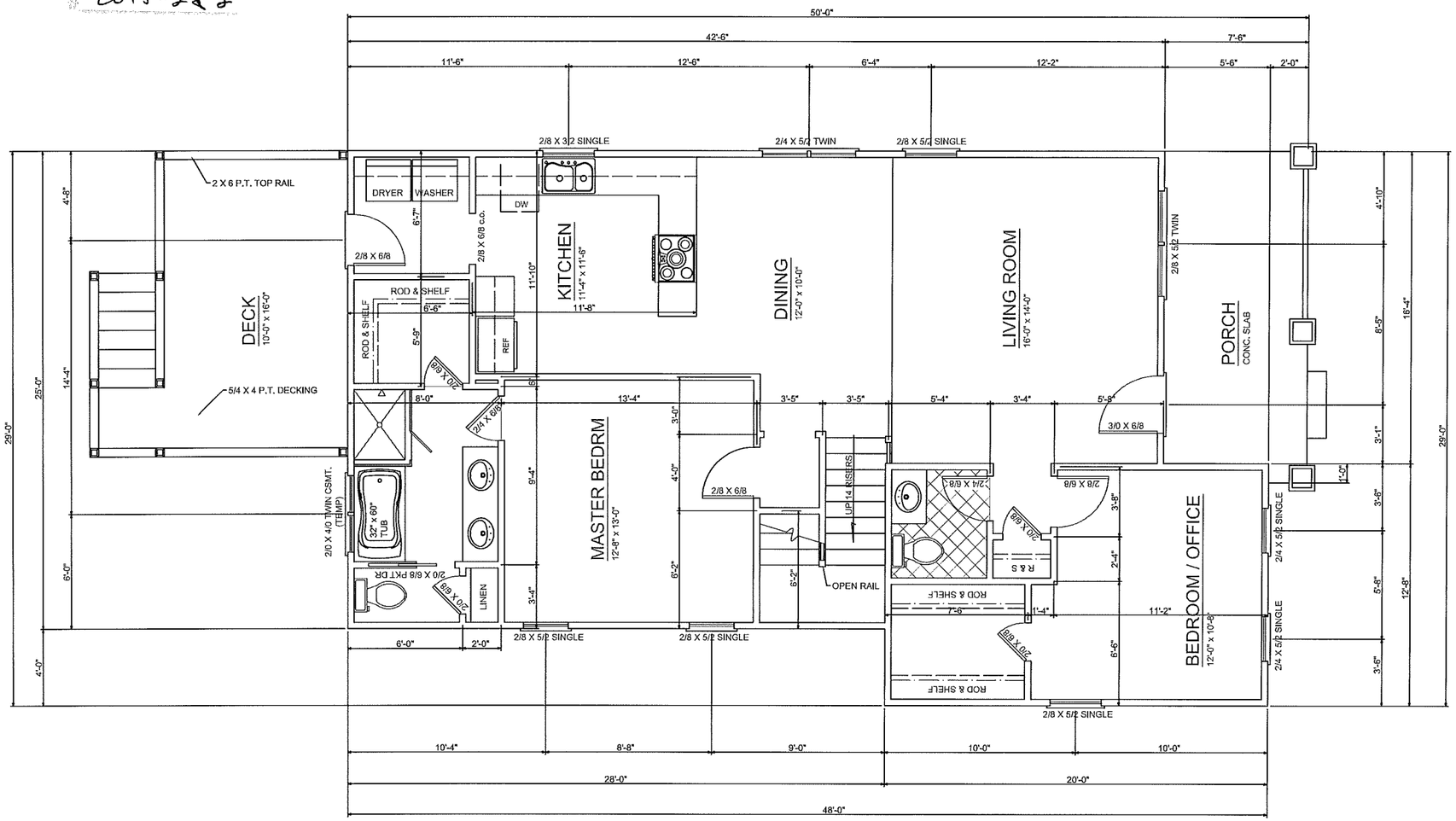

FIRST FLOOR PLAN 1/4" = 1'-0"

1190 HEATED SQUARE FEET

Daedalus Properties
Charlotte, NC
704-890-3907 Office 704-377-8412 fax

FIRST FLOOR PLAN

New Home at:
1556 Merriman Av.
Charlotte, NC

DATE:
12-28-15

DRAWN BY:
BILL ELMORE

SHEET
3
OF 7

APPROVAL
Charlotte Historic District Commission
Certificate of Appropriateness
2015-282

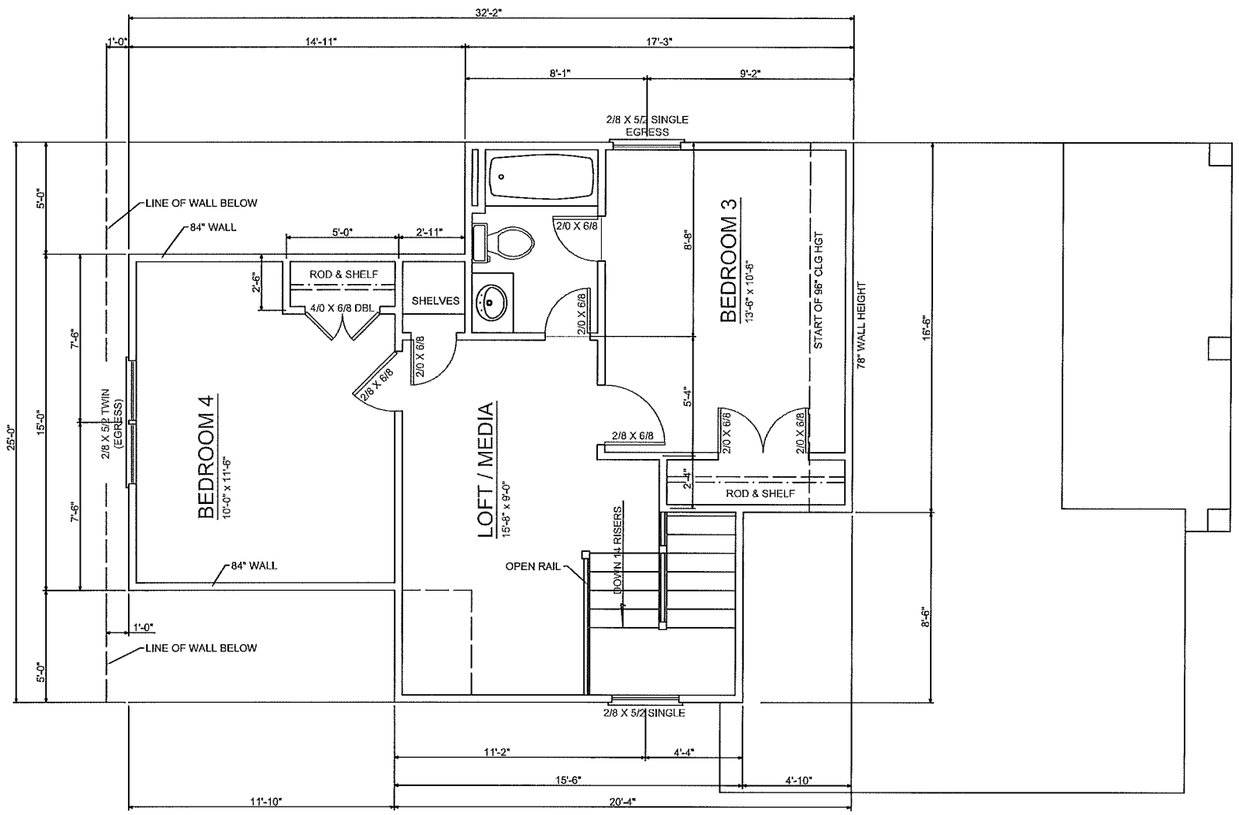

SECOND FLOOR PLAN 1/4" = 1'-0"

649 HEATED SQUARE FEET

Daedalus Properties
Charlotte, NC
704-890-3907 Office 704-377-8412 fax

SECOND FLOOR PLAN

New Home at:
1556 Merriman Av.
Charlotte, NC

DATE: 12-28-15

DRAWN BY: BILL ELMORE

SHEET 4 OF 7

ADDCOM
Certificate of Approp
2015-282

LEFT SIDE ELEVATION 1/4" = 1'-0"

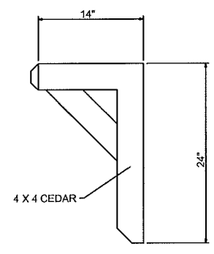

CEDAR WOOD BRACKETS

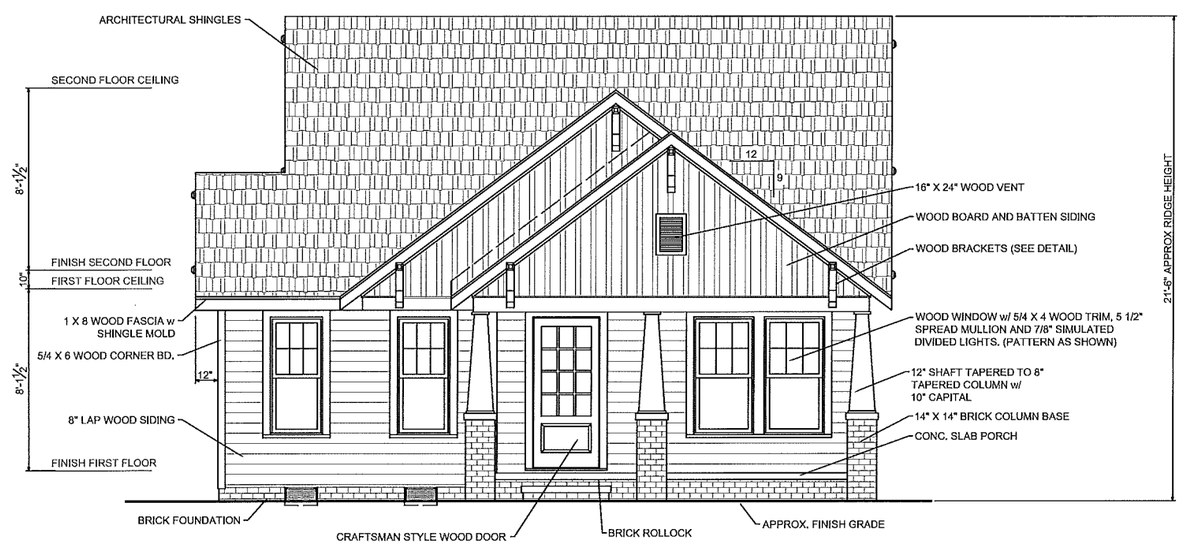

FRONT ELEVATION 1/4" = 1'-0"

Daedalus Properties
Charlotte, NC
704-890-3907 Office 704-377-8412 fax

FRONT & LEFT SIDE ELEVATIONS

New Home at:
1556 Merriman Av.
Charlotte, NC

DATE: 12-28-15

DRAWN BY: BILL ELMORE

SHEET 5 OF 7

APPROVED
Charlotte Historic District Commission
Certificate of Appropriateness
2015-282

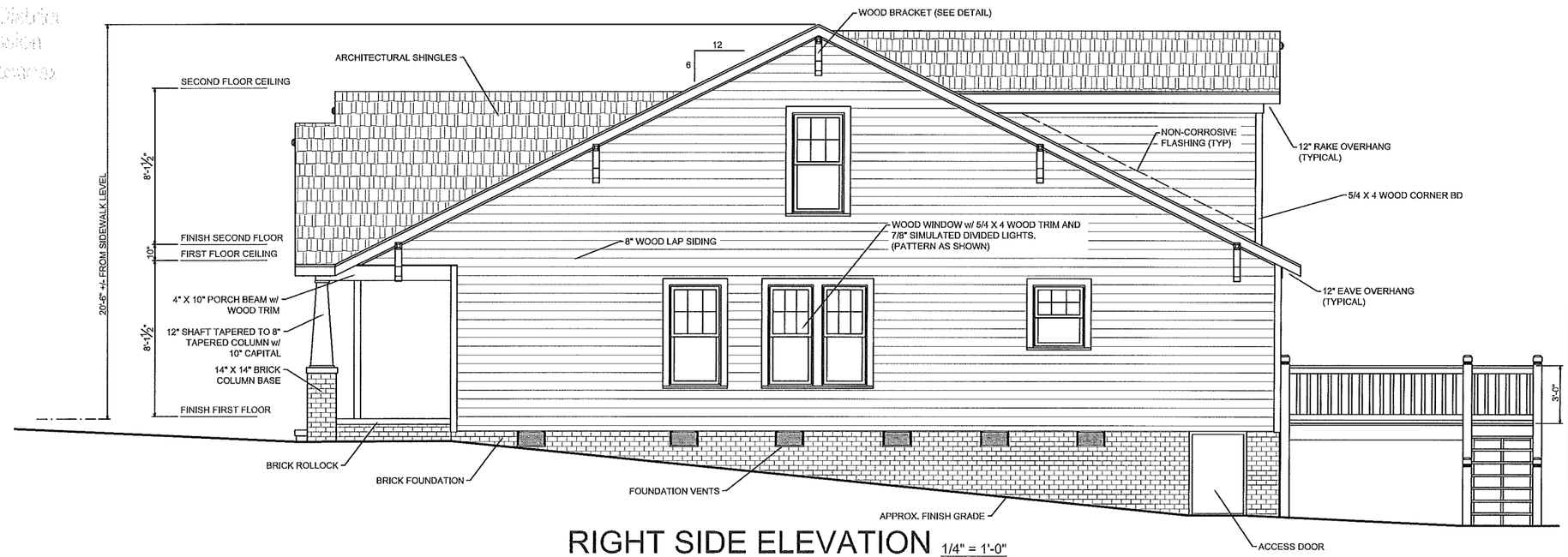

RIGHT SIDE ELEVATION 1/4" = 1'-0"

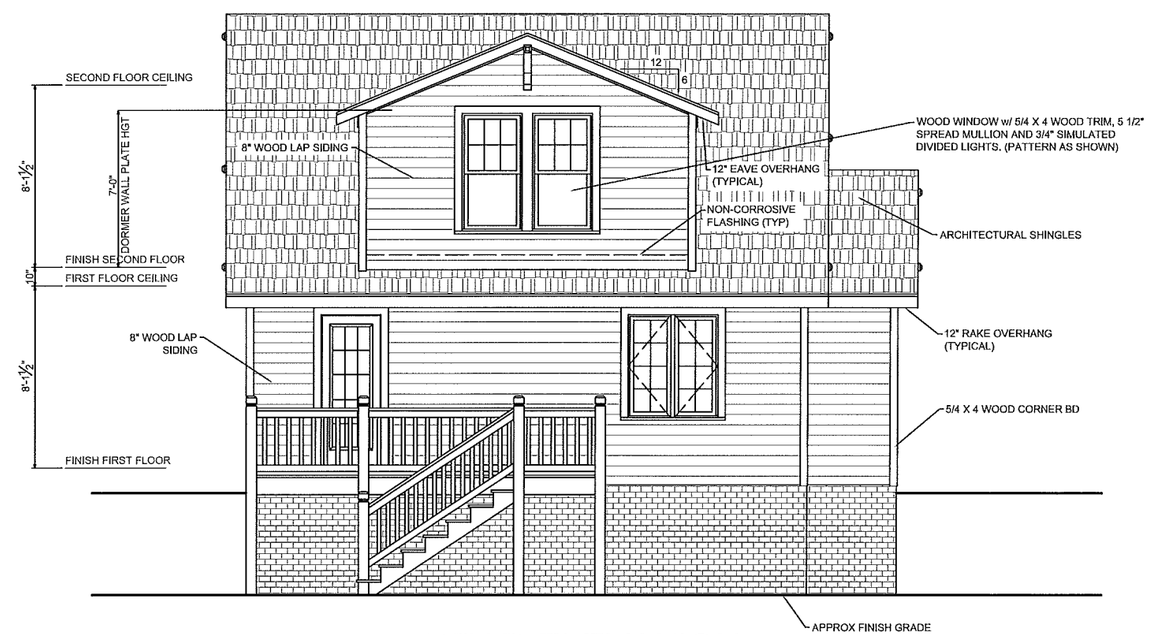

REAR ELEVATION 1/4" = 1'-0"

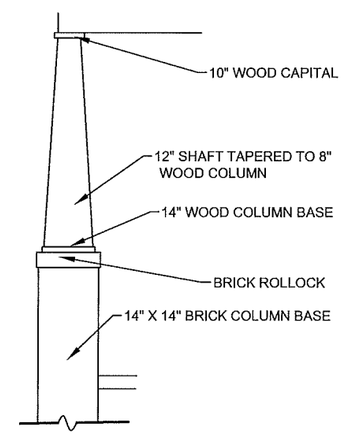

TAPERED WOOD COLUMN

Daedalus Properties
Charlotte, NC
704-890-3907 Office
704-377-8412 fax

REAR & RIGHT SIDE ELEVATIONS

New Home at:
1556 Merriman Av.
Charlotte, NC

DATE:
12-28-15

DRAWN BY:
BILL ELMORE

SHEET
6
OF 7

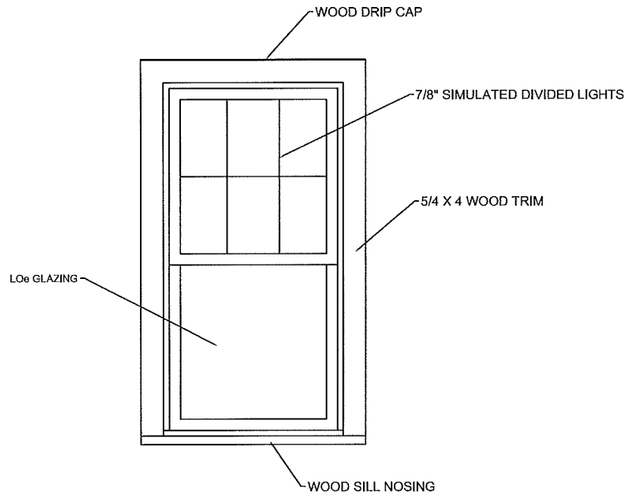

TYPICAL WOOD WINDOW TRIM

NOTE: TWIN UNITS HAVE 5 1/2" MULLION

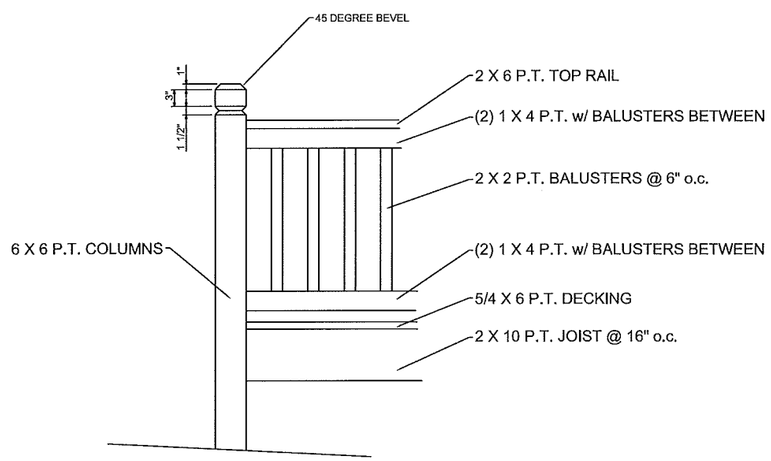

DECK DETAIL

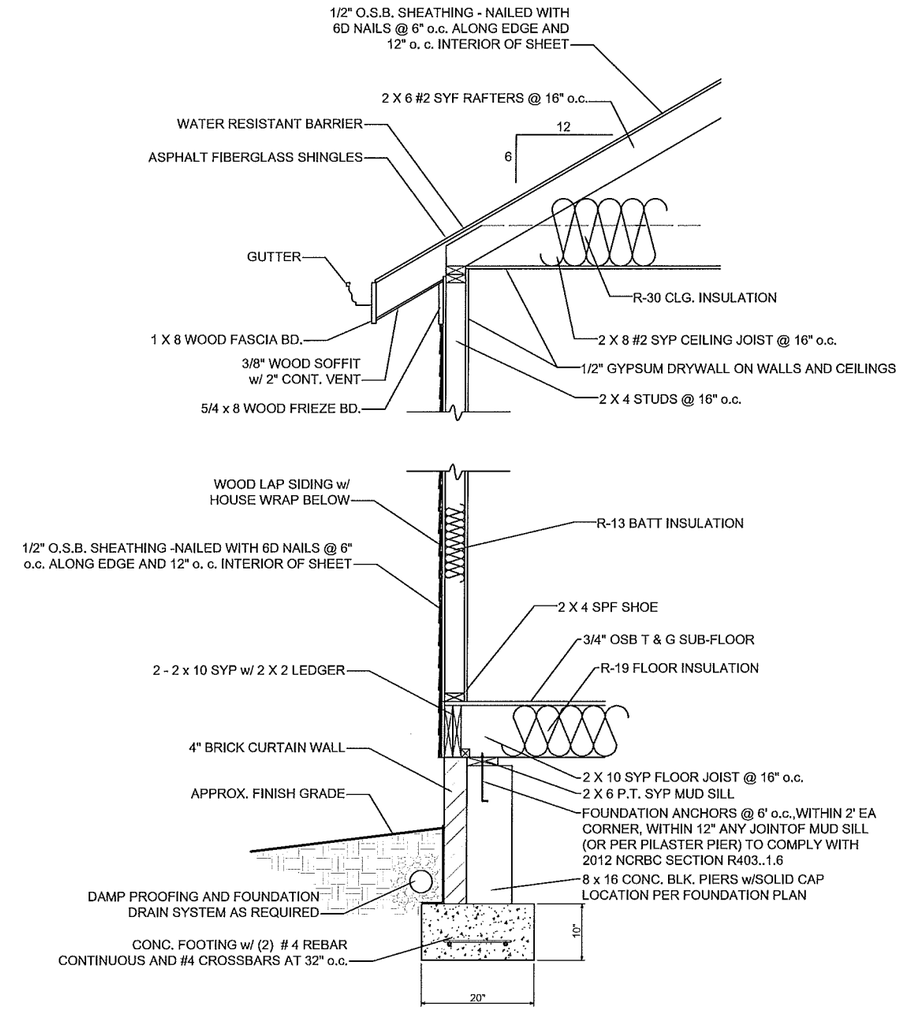

TYPICAL WALL SECTION

APPROVED
Charlotte Historic District Commission
Certificate of Appropriateness
2015-288

Daedalus Properties
Charlotte, NC
704-890-3907 Office
704-377-8412 fax

WALL SECTION & DETAILS

New Home at:
1556 Merriman Av.
Charlotte, NC

DATE:
12-28-15

DRAWN BY:
BILL ELMORE

SHEET
7
OF 7

APPROVED

Charlotte
Historic District
Commission

Certificate of Appropriateness

2015-282