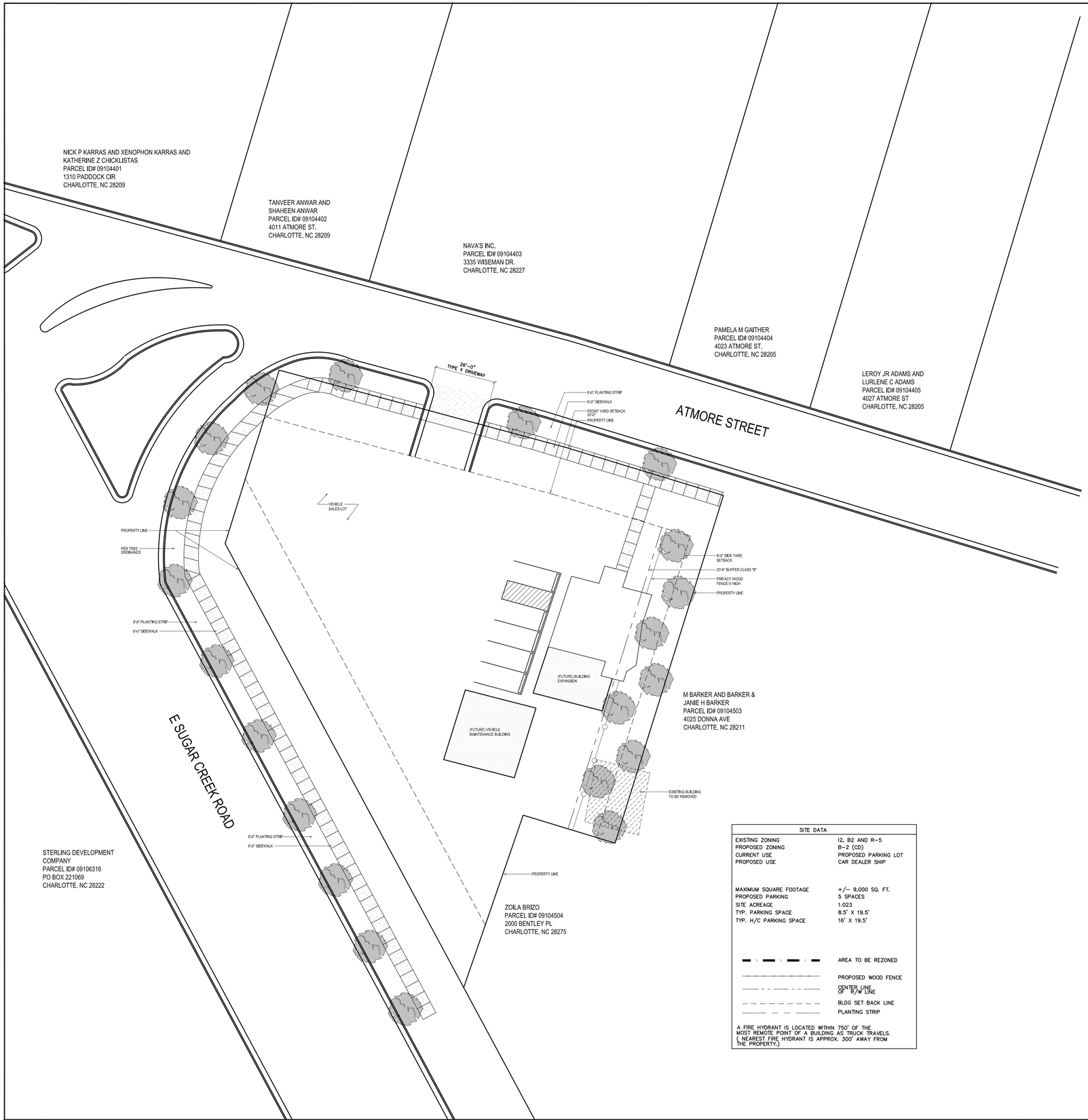

SITE DATA	
EXISTING ZONING	I2, B2 AND R-5
PROPOSED ZONING	B-2 (CD)
CURRENT USE	PROPOSED PARKING LOT
PROPOSED USE	CAR DEALER SHIP
MAXIMUM SQUARE FOOTAGE	+/- 9,000 SQ. FT.
PROPOSED PARKING	5 SPACES
SITE ACREAGE	1.023
TYP. PARKING SPACE	8.5' X 19.5'
TYP. H/C PARKING SPACE	16' X 19.5'
	AREA TO BE REZONED
	PROPOSED WOOD FENCE
	CENTER LINE OF R/W LINE
	BLDG SET BACK LINE
	PLANTING STRIP

A FIRE HYDRANT IS LOCATED WITHIN 750' OF THE MOST REMOTE POINT OF A BUILDING AS TRUCK TRAVELS. (NEAREST FIRE HYDRANT IS APPROX. 300' AWAY FROM THE PROPERTY.)

1 SITE PLAN

SCALE: 1"=20'-0"

Conditional Notes:

1. Screening will comply with the applicable standards set forth in section 12.303 of the City of Charlotte zoning ordinance.
2. Parking meets the standards of the table 12.202 of the City of Charlotte Zoning Ordinance with shrubs and trees to screen from the public right-of-way and the abutting properties.
3. The dumpsite's will be screened by a 6' solid wood fence or a solid masonry with a solid wood gate.
4. All proposed trees, fences and signs will not interfere with sight distance at the entrance of the site. Any fence requiring a certificate will be obtained from the CDOT.
5. The sidewalk may meander and the planting width may vary, but not less than 8 feet to save trees 6" in caliper and larger.
6. No storm water detention in buffer or setbacks.
7. All the new utilities to be underground.
8. Signage will be permitted in accordance with applicable zoning or sign ordinance standards.
9. Throughout this rezoning petition, the terms "Owners/Petitioners" shall, with respect to the site, be deemed to include the heirs, devisees, personal representatives, successors in interest and assignees of the owner or owners of the site who may be involved shall apply.
10. The Developer will provide 10% tree savings of the existing trees.
11. The petitioner acknowledges that other standard development requirements imposed by other city ordinances, standards, policies, and appropriate design manuals will exist, those criteria (for example, those that require buffers, regulate streets, sidewalks, trees, storm water, and site development, etc.) will apply to the development site. this includes chapters 6, 9, 12, 17, 18, 19, 20, and 21 of the city code. conditions set forth in this petition are supplemental requirements imposed on the development in addition to other standards, where conditions on this plan differ from ordinances, standards, policies, and approaches in existence at the time of formal engineering plan review submission, the stricter condition or existing requirements shall apply.
12. If an adjacent property zoning changes to a district that would not require a buffer, the buffer required for this property may be reduced or eliminated to meet the proper requirement for that zoning criteria.
13. The petitioner will comply with the Charlotte City Council approved and adopted Post Construction Controls Ordinance.
14. The Building height will not exceed 40 feet
15. Detached lighting will be limited to 15 feet in height. Lighting will be shielded with full cut-off fixtures.
16. The development of the site shall be controlled by the standards depicted on this Site Plan and by the standards of the City of Charlotte Zoning Ordinance. The development depicted by this plan is intended to reflect the general arrangement of the proposed use on the site, but the exact details of the configuration and and placement of site elements may be altered or modified within the limits prescribed by the ordinance as specified in section 6.206(2) as may be applicable. Minor and incidental changes of detail which do not alter the basic, overall layout and/or the relationships to abutting sites are permitted as a matter of right for the petitioner/developer.
17. All proposed development on the site shall comply with applicable ordinance requirements regarding such things as the number and arrangement of off-street parking, setback/yard dimensions, signage, screening, open space, landscaping, tree ordinance, ect.
18. Vehicular access shall be limited to the one shown on this plan. The exact location may vary from depicted, but shall comply with all applicable design/location requirements of the Charlotte Department of Transportation.
19. Permitted Uses: Under section 9.802 (Uses permitted by right.) Section 9.803 (Uses permitted under prescribed conditions) and section 9.804 (Accessory uses) Will be permitted.
20. Buffers and Screening:
    1. Buffers and Screening on site shall conform with the standards specified in section 12.302 and 12.303 of the ordinance.
    2. As depicted on the Schematic Site Plan, a Class "B" Buffer with a 6 ' wooden fence shall be established along the site's east development boundary line abutting an existing office bldg. owned by the petitioner.
21. Lighting:
    All freestanding lighting and all exterior lighting will be shielded so as to minimize the impact from lights that may be visible from nearby properties. Freestanding lighting shall not exceed 20 feet in height. No wall 'pak' type lighting shall be used, but attached decorative lighting fixtures such as sconces may be used.
22. Signs: Signage shall conform to the provision of the ordinance under chapter 13.
23. Tree Ordinance: The site shall conform to the City of Charlotte Tree Ordinance along the East Sugar Creek rd. and Atmore Street Frontage.

2 GENERAL NOTES

SCALE: NTS

LANDSCAPE NOTES:

1. THE LANDSCAPE CONTRACTOR SHALL MAKE HIMSELF AWARE OF EXISTING UTILITIES. HE SHALL NOTIFY THE RESPECTIVE PUBLIC UTILITIES PRIOR TO BEGINNING CONSTRUCTION.
2. PLANTING BEDS AND PLANT LOCATIONS SHALL BE STAKED BY THE CONTRACTOR AND APPROVED BY THE OWNER OR OWNER'S REPRESENTATIVE PRIOR TO INSTALLATION
3. PLANTING BEDS SHALL BE CLEARED OF ALL GRASS AND WEEDS PRIOR TO INSTALLATION OF PLANTS, AND SHALL BE CULTIVATED AS PRIOR TO INSTALLATION OF PLANTS, AND SHALL BE CULTIVATED AS SHOWN ON THE PLANTING DETAILS.
4. ALL DISTURBED AREAS TO BE SEEDED UNLESS OTHERWISE NOTED.
5. PLANTING BEDS SHALL HAVE 4" SHREDDED HARDWOOD BARK MULCH IN ENTIRE BED UNLESS OTHERWISE NOTED ON DRAWINGS.
6. ALL PLANTED AREAS SHALL BE TREATED WITH A WATER-SOLUBLE HERBICIDE FOR THE NON-SELECTIVE CONTROL OF ANNUAL AND PERENNIAL WEEDS PRIOR TO PLANTING.
7. ALL TREE AND SHRUB PITS SHALL BE BACKFILLED WITH A PLANTING SOIL MIXTURE OF 1 PART PEAT MOSS, 3 PARTS TOP SOIL AND 1 PART SAND, THOROUGHLY MIXED.
8. ALL PLANTED AREAS TO BE FERTILIZED WITH GRANULAR FERTILIZER, CONTRACTOR TO PROVIDE SOIL TEST AND FERTILIZER APPLICATION RATES IF REQUIRED FOR APPROVAL. RATES IF REQUIRED FOR APPROVAL.
9. SPRAY TREES AND SHRUBS WITH AN ANTI-DESICCANT IF FOLIAGE IS PRESENT.
10. EVERGREEN TREES AND SHRUBS SHALL BE PLANTED THE SAME AS DECIDUOUS ARTERIAL.
11. DO NOT PRUNE ANY MATERIAL UNTILIT HAS BEEN VIEWED AND ACCEPTED BY THE OWNER OR OWNER'S REPRESENTATIVE.
12. ALL PLANT MATERIAL TO BE NURSERY GROWN AND TO COMPLY WITH AMERICAN STANDARD FOR NURSERY STOCK ANSI-Z60-1-1986.
13. ALL MATERIALS INSPECTED AT THE SITE AND FOUND NOT TO BE ACCEPTABLE SHALL BE REMOVED FROM THE SITE ON THE DAY OF REJECTION.
14. IMMEDIATELY AFTER A TREE IS PLANTED, IT SHOULD BE SUPPORTED WITH STAKES AND GUY WIRES TO FIRMLY HOLD IT IN PLACE. (SEE DETAIL-THIS SHEET) REMOVE STAKES AND TIES AFTER ONE YEAR.
15. THE LOWER TRUNKS OF NEW TREES SHOULD BE WRAPPED WITH BURLAP OR PAPER TO PREVENT EVAPORATION AND SUN SCALD. THE WRAPPING SHALL REMAIN ON THE TREE AT LEAST ONE YEAR.
16. PLANT ALL TREES AT LEAST 3 1/2 FEET FROM THE END OF HEAD-ON PARKING SPACES TO PREVENT DAMAGE FROM CAR OVERHANG.

3 TREE PLANTING NOTES

SCALE: NTS

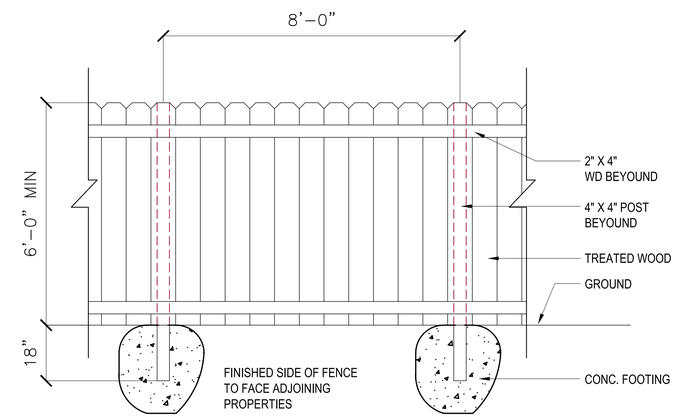

4 FENCING DETAIL

SCALE: NTS

PETITIONER: 2011---

ROBERT L. BRANDON PLANNING
& ZONING CONSULTANTS
P.O. BOX 471303
CHARLOTTE, NC 28247
PHONE: (704) 7394069
FAX: (704) 7394069
CELL: (704)2806890

REZONING:
KRZYSZTOF BROSZKIEWICZ
4026 ATMORE ST
CHARLOTTE, NC
ID # ---------; CODE/ITEM #: --

SITE PLAN & NOTES

REVISIONS:		
NO.	DATE:	DESCRIPTION
1	---	---
2		
3		

DATE:	8-22-11
SCALE:	AS NOTED
DRAWN BY:	HJJ
CHECKED BY:	RB
JOB NO.	71311RKB
CAD FILE:	

SP010