CHARLOTTE

CHARLOTTE HISTORIC DISTRICT COMMISSION

CERTIFICATE OF APPROPRIATENESS - AMENDED

CERTIFICATE NUMBER: HDCADMRM-2017-00608

DATE: 3 October 2017
5 October 2017 - AMENDED

ADDRESS OF PROPERTY: 1513 Belvedere Avenue

HISTORIC DISTRICT: Plaza Midwood

TAX PARCEL NUMBER: 08119104

OWNER(S): Anna Verderame

DETAILS OF APPROVED PROJECT: The project is the installation of twenty-one (21) full replacement windows and trim. The new exterior trim will be wood in the exact dimensions as existing, including the drip edge molding and a minimum 1/¾ - 2 inch historic sill, see attached exhibit labeled "Trimline L300 Window Section – October 2017." The new windows will be wood, double-hung, with 5/8" wood Simulated True Divided Lights (STDL) classic putty glazed, permanently affixed exterior muntins, as indicated on attached exhibit labeled "Trimline Window Spec Sheet from Applicant – October 2017." Any other repairs to fascia, soffit or trim will be made with to match existing in material, dimension and detail; these repairs are considered true repair and maintenance and do not require approval.

Applicable Policy & Design Guidelines and Approval Authority – Projects Eligible for Administrative Approval, page 2.6: Replacement windows and doors.

- This Certificate of Appropriateness (COA) indicates that this project proposal has been determined to comply with the standards and policies of the Charlotte Historic District Commission.
- Display the blue COA placard in a visible location along with any required permits.
- No other approvals are to be inferred.
- No demolition other than that specifically indicated on any attached plans is authorized under this approval.
- All work must be completed in accordance with all other applicable state and local codes.
- Any changes from or additions or deletions to the plans referenced herein will void this Certificate, and a new application must be filed with the Historic District Commission.

This Certificate is valid for a period of twelve (12) months from the date of issuance. Failure to obtain a building permit in that time will be considered as a failure to comply with the Certificate and the Certificate will become invalid. If a building permit is not required, then the approved work must be completed within twelve (12) months of the date of issuance of this Certificate. In either situation, the Certificate can be renewed for an additional twelve (12) months by Historic District Commission staff by written request within the first twelve (12) months from the date of issuance.

James Haden, Chairman

Staff Kristina A. Harpst

CHARLOTTE-MECKLENBURG PLANNING DEPARTMENT

www.charlotteplanning.org

600 East Fourth Street
Charlotte, NC 28202-2853
PH: (704)-336-2205
FAX: (704)-336-5123

"Trimline L300 Window Section - October 2017"

TRIMLINE
WOOD WINDOWS

APPROVED
Charlotte Historic District Commission
Certificate of Appropriateness
HDCADMR01-2017-00608

L300

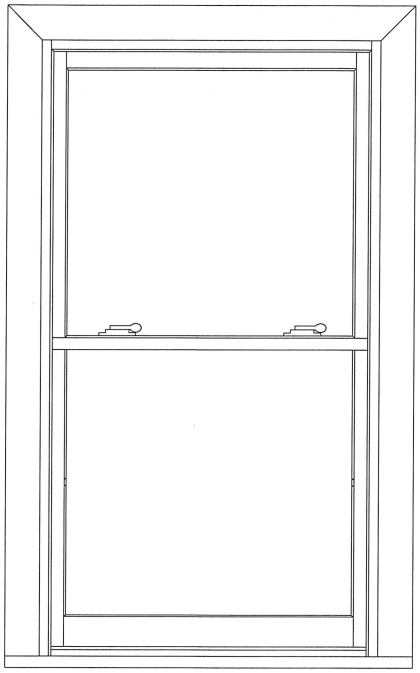

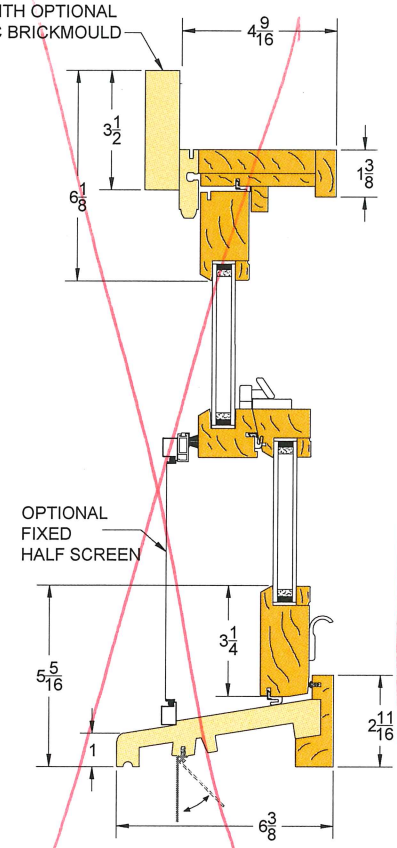

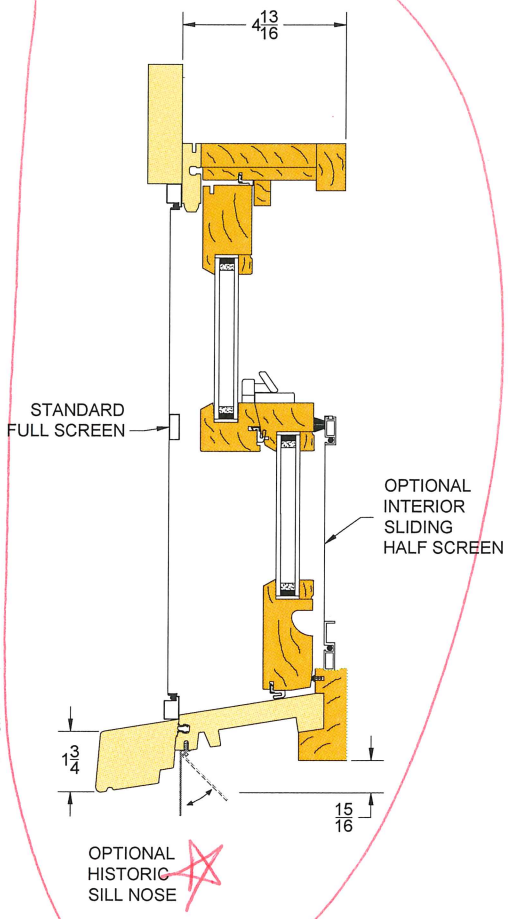

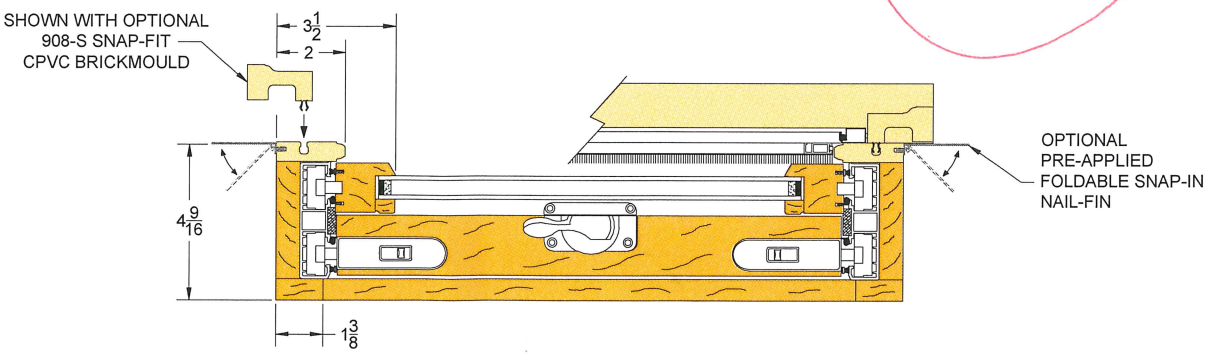

SHOWN WITH ALL SCREEN OPTIONS AVAILABLE

"Trimline Window Spec Sheet from Applicant – October 2017"

INSECT SCREENS	• Standard Full screen of .019 thick roll formed aluminum; spring loaded plunger hardware system used to mount screen to exterior brickmould of window; crossbrace used on windows over 40" in height. • Optional interior sliding or fixed exterior half screen of .050 thick extruded aluminum. • Standard colors available: white, bronze, earthtone, beige, black and hunter green. Custom colors also available. • Charcoal fiberglass screen cloth (18 x 16 mesh) standard; optional screen mesh available in charcoal or aluminum color wire cloth or Better View[tm] high transparency screening in charcoal cloth only.
GRILLES	• **Simulated Divided lites** (SDL) In a classic putty glazed 5/8", 7/8", 1", 1-1/4" or 1-1/2" wood (~~optional. cPVC~~) muntin profile permanently applied to exterior of the insulated glass. Double faced tape is used to apply muntin to the glass which first is prepared with a saline type glass bonding and coupling agent before muntin is applied to help ensure lasting adhesion. An optional between the glass dark bronze shadow bar is available for an authentic true divided lite look. Interior wood in pine (standard) or mahogany matching the interior wood species in either permanent or removable style 5/8" or 7/8" wide divided lite patterns only. Removable style not available in 1", 1-1/4", 1-1/2" widths. • **True Divided lites** (TDL): Available in 1-1/8" width in pine only. TDL bar has the look of historically accurate true putty glazing. • **Removable wood grilles**: Available in 5/8" or 7/8" wide classic double stepped profile matching window interior wood species in pine (standard) or mahogany in a wide array of standard or custom divided lite patterns only. • **In-glass aluminum** "GBG" (grilles between the glass) muntins are available in 5/8" flat profile or 3/4" sculptured profile in all standard exterior cladding color finishes for dust free easy cleaning. Available in either divided lite or diamond patterns. • **Combo wood-aluminum**: 5/8" flat or 3/4" sculptured in-glass aluminum muntin with either permanently applied (see SDL) or removable wooden interior wood grille in pine (standard) or mahogany.
ACCESSORIES	• A standard zero clearance mull is used for factory mulling of windows without increasing the combined unit dimension of the windows mulled. • Optional 2", 4" and 6" exterior spread mullion covers are also available with internal support blocking; interior wooden mull covers in pine (standard) or mahogany as specified are provided loose. • 11/16" interior wooden jamb extension in pine (standard) or mahogany are factory applied to the perimeter of the window and are available in custom sizes to provide overall jambs depth up to 9".
WARRANTY	• Limited 10 year. • 20 years non-prorated on insulating glass. • Non-square, decorative/leaded glass 5 years.
PERFORMANCE	**Thermal Ratings**

Glazing	U-Value	R-Value	SHGC	V.T.	CRF
Clear	.45	2.22	.55	.58	43
ClimaGuard	.28	3.57	.28	.50	58
ClimaGuard Plus	.25	4.00	.27	.48	48

Clima Guard - 3mm RLE 7138 (#2) / Clear / Argon
Clima Guard Plus - 3mm RLE 7138 (#2) / IS-20 (#4) / Argon

Structural Ratings

Test Specimen	Air Infiltration	Performance Class-Grade
45 x 75-3/4 (1118 x 1924)	0.14 cfm/ft^2	LC-40

TEST STANDARD	• NFRC Certified: meets or exceeds rating and lableing requirements as per NFRC 100, 200 and 500 test procedures. • AMMA/WDMA/CSA 101/I.S.2/A440-05

APPROVED
Charlotte Historic District Commission
Certificate of Appropriateness
HDCADMRM-2017-00608